LC-10

BOUNDARY WATERS

Liquid Crystal Depth Finder

Owner's Manual

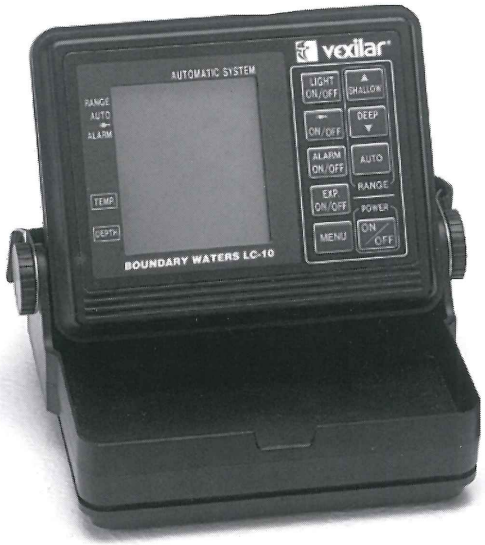

vexilar®

LC-10 Operation Manual

CONTENTS

General Description	2
Specifications	3
Assembly	4
Installation	6
Operation	10
Menu Functions	13
Typical Indications	15
Maintenance	19
Trouble Shooting	20
Other Products	21
Optional Transducers	24
Service and Support	27

vexilar®

Founded in 1965, Vexilar, Inc. has a long history of bringing revolutionary technology to the sport fishing industry. Just some of the Vexilar firsts include: the first liquid crystal display, the first fish alarm, the first three color display, and the first CRT and straight line paper graphs, for the sport fisherman.

GENERAL DESCRIPTION

The Boundary Waters model LC-10 is a compact and light-weight liquid crystal depth sounder. It indicates depth, shows changes in bottom content, and conditions. It can also discriminate between large underwater targets, such as fish, and smaller targets such as bait fish and plankton.

The unit transmits bursts of high frequency pulses which are converted from electrical to mechanical energy by the transducer. These "sound" pulses radiate from the transducer downward and are reflected back up to the transducer where the energy is converted back to electrical signals. The LC-10 then processes these signals and displays them.

The graphic display is accomplished by activating individual or groups of pixels, or dots, on the LCD. The first vertical column of pixels, on the right edge of the display, shows the most current information. This column is then moved to the next place, to the left, as soon as a new column is ready. This process is repeated continually to make up the graphic display. Thus what you see on the display is a brief history of what the boat just went over. The LC-10 displays the depth as an easy to read number in the lower corner of the display.

SPECIFICATIONS

- Operating Voltage: 8.5 - 15 Volts (12 Volts Nominal)
- Current Draw: 50mA (100 mA w/Backlight On)
- Power Output: 400 Watts (Peak to Peak)
- Frequency: 200 Khz
- Beam Angle: 22 Degree
- Resolution: 64 x 64 Pixels
- Sounding Rate: 750/Min.
- Display Size: 2" x 2 1/4"
- Dimensions: 5.9"H x 6.4"W x 2.5"D
- Weight: 1.6 Lbs. (No Batteries)
- Depth Ranges:
  0-5', 0-10', 0-15', 0-20', 0-30', 0-40', 0-60', 0-80', 0-120', 0-160', 0-240', 0-320', and 0-400'.

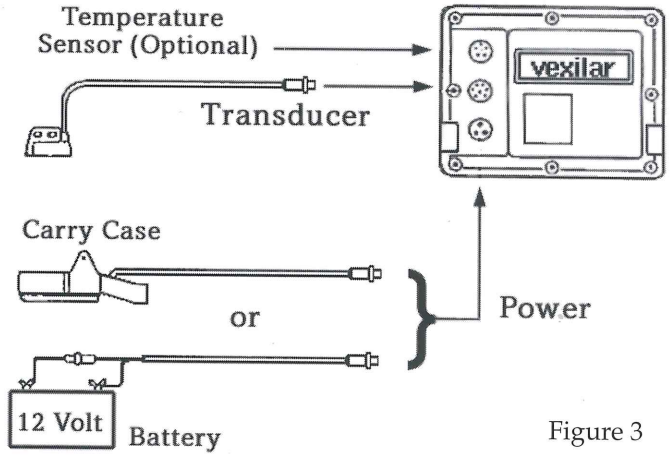

Figure 3

ASSEMBLY

Set the battery tray down and place the unit, face down, inside. Line up the bracket holes and install the gimbal knobs. Make sure the rubber washers are in place. Turn the knobs in, but tighten only slightly.

INSTALLING THE BATTERIES

Turn the unit over to access the battery compartment door. Unscrew the two retaining screws and remove the compartment door. The screws are restricted from falling out so you don't need to worry about losing them. Install eight AA batteries (not included) by following the imprinted guides in the battery compartment. Use ALKALINE or NiCAD rechargeable batteries. Replace the compartment door and tighten the screws back into place.

Make sure that the power cord from the battery pack is plugged into the bottom (3 pin) jack on the LC-10 and that the retaining ring is screwed down tight.

Note— The battery compartment is not sealed. Water may leak inside. After use, , if it is wet inside, remove the batteries and leave the compartment open. This will allow it to dry and minimize any corrosion that may develop.

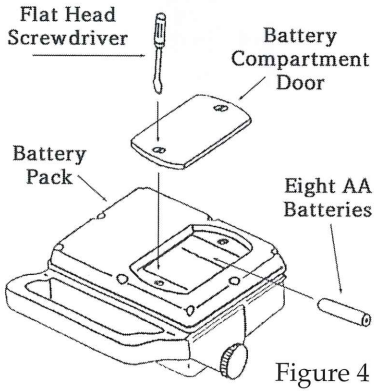

Figure 4

ASSEMBLING THE TRANSDUCER

Locate the transducer and bracket assembly. This includes:

1 - Transducer
1 - Metal angle bracket
1 - Suction cup
1 - Short panhead screw
2 - Short machine screws
2 - Nuts
2 - Washers
2 - Long panhead screws
1 - Safety rope

The two longer wood screws, if included, are for permanently mounting the transducer bracket to the boat. They do not apply here.

The suction cup installs using the single short screw. Attach it to the slot in the angle bracket. Center the vertical adjustment and tighten the screw until the suction cup can no longer rotate. Note - The small fin at the edge of each cup is meant to help you remove the cup from the surface it is stuck to.

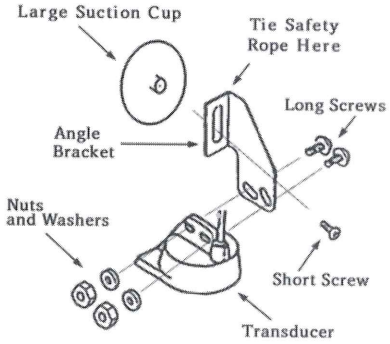

Figure 5

Now locate the transducer and the remaining hardware. Install the transducer onto the angle bracket. The flat edge of the transducer should be facing the boat. Install the two short screws through the transducer slots and into the angle bracket slots. Place the washers and then the nuts onto the screws and tighten, only slightly. Slide the transducer up and forward in the bracket as far as it will go and then tighten the screws firmly.

Finally, install the safety rope. Tie the rope around the upper end of the slot in the metal angle bracket. You will tie the other end to the boat.

TRANSDUCER INSTALLATION

The suction cup bracket is meant to be mounted on the transom or side of a boat. You may need to adjust the transducers position in the bracket to match the angle in which you mount it on your boat. Ideally, it should point straight down when your boat is normally loaded.

Wet the suction cup and press the assembly onto the surface of the hull in the area where you are going the attach it. Slide the assembly up or down until the bottom edge of the transducer is close to the bottom edge of the hull.

Tie the end of the safety rope to the boat. Leave as little slack in the rope as you can. If the suction cup lets loose, the rope may save your transducer and depth sounder from being lost.

If your boat has a flat transom and you wish to get clear readings while the boat is moving at a faster speed, you

may need to purchase the optional Tri-Cup bracket shown in figure 6.

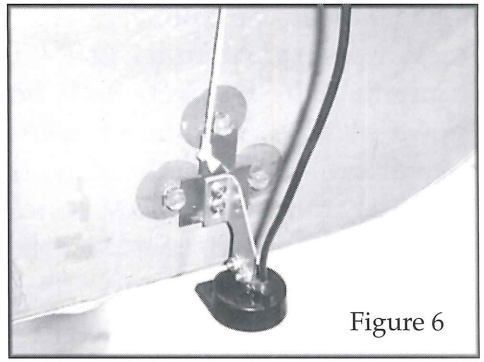

Figure 6

ALTERNATE TRANSDUCER MOUNTING

If you choose not to use the suction cup mounting method, you can permanently mount the transducer to your boat. This can, often, give better results, but you will lose the portability of the transducer.

TRANSOM MOUNTING

The LC-10 transducer can be mounted, permanently, on the transom of the boat. Proper installation will allow a clear depth reading at any boat speed. Attach the angle bracket to the transducer (flat edge facing forward). Locate a spot at the bottom of the transom that is clear of ribs and rivets that would be just in front of the transducer. Hold it up to the boat. Mark the first hole on the transom, or mounting plate, so that when the bottom of the transducer is flush with the bottom of the boat, the hole is located at the bottom of the bracket slot. This gives you room to "fine tune" the position of the transducer and optimize your reading after you've put the back boat in the water.

Drill out the hole, install one screw, and tighten the bracket down securely. Be sure to seal any holes drilled into the transom with silicone to prevent water from leaking into the boat.

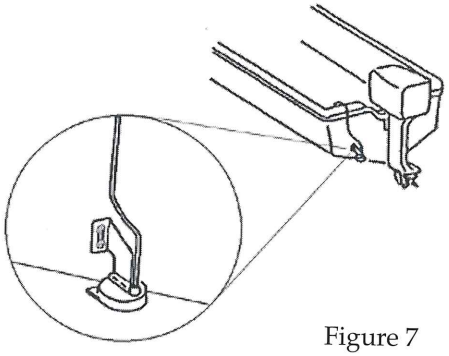

Figure 7

If you have trouble keeping a clear reading, try tilting the transducer in the bracket so that the back, rounded, edge is slightly lower than the front, straight, edge. If readings are still not clear, adjust the bracket on the boat downward until the reading becomes clear. Once you have verified that the unit reads at all boat speeds, drill out the second hole and install the second mounting screw.

IN-HULL MOUNTING

This method, gluing the transducer to the hull, gets the same results as if you were mounting the transducer externally, only there are no holes to drill in the boat and there is no transducer on the transom to get damaged by impact. This method works well for canoes and small boats that are moved in and out of the water often.

Finding the best location for the transducer before mounting is critical. Choose a flat smooth spot near the center of the bilge and near the back of the boat. It is a good

idea to make a "test run" before you permanently install the transducer to make sure that you can indeed get a reading through your hull and at all speeds. Put about a half inch of water in the bottom of the boat and hold the transducer in the intended location. Move the transducer around until you get the best reading. Mark the spot.

To install the transducer, first clean the spot of mud and oil. Using an epoxy or silicone glue, make a puddle, about the same size as the transducer, on the inside of the hull. Place the transducer in the glue. Press it down firmly, gently twisting it back and forth, making sure that there are no air bubbles in the glue between the transducer and the hull. Let the glue dry completely before turning the unit on.

PERMANENT MOUNTING (Optional)

You can permanently mount the LC-10 to your boat, yet maintain the easy portability for times when you go fishing in another boat. You will need to have a battery in your boat to power the unit. Also, you will need to order the optional Boundary Waters Mounting Kit. This kit contains a swivel gimbal mount, a transducer mounting bracket, and power cord.

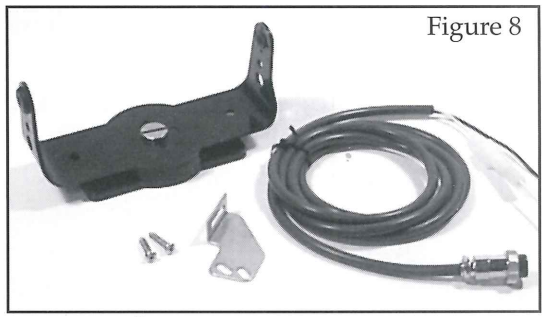

Figure 8

OPERATION

Figure 9 shows the main controls of the LC-10.

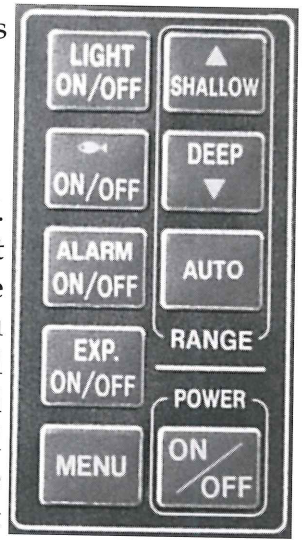

Figure 9

ON/OFF

Turns the LC-10 ON and OFF. Simply turning the unit on will start the Automatic System. This will give good results in most conditions. If you choose to modify any of the control features, your settings will be saved in memory when the unit is turned off. When you turn it on again the unit will operate the same way as it did when you last used it.

AUTO

Press the AUTO button to turn on or off the automatic range control feature. This feature will automatically change the depth range for you when the depth of the water moves outside the current range. When the AUTO feature is off you must change the range manually by pressing the SHALLOW or DEEP buttons.

RANGE CONTROL

The two buttons at the top right of the control panel set the depth range when the Auto Mode is off. Pressing the SHALLOW button changes the range to the next shallowest range. Pressing the DEEP button changes the range to the next deeper range.

LIGHT ON/OFF

Press the LIGHT ON/OFF button to turn on the Backlight. Press it again to turn the backlight off. NOTE - The backlight will double the current requirement of the LC-10, thus cutting your battery life in half.

FISH ID ON/OFF

Press the FISH ID ON/OFF button to turn the fish identification feature on or off. When the feature is on, any target that the LC-10 sees will be judged as to whether or not it is a fish. If the unit determines that there is a good chance the target is a fish it will display a fish shaped symbol on the display.

ALARM ON/OFF

Press the ALARM ON/OFF button to turn on or off the fish alarm feature. When ON this feature will sound an alarm when a fish is detected. This feature works independently from the FISH ID feature.

EXPANSION

EXP. ON/OFF displays only the bottom half of the water depth when selected to ON. This doubles the display resolution making it much easier to see targets near or on the bottom. Pressing the EXP. ON/OFF button once puts the LC-10 in EXPANSION mode. Pressing it again will go back to the normal view.

MENU

Pressing the MENU button opens the menu page. Pressing it again will go back to the normal view. Each item in the menu will be explained in the next section.

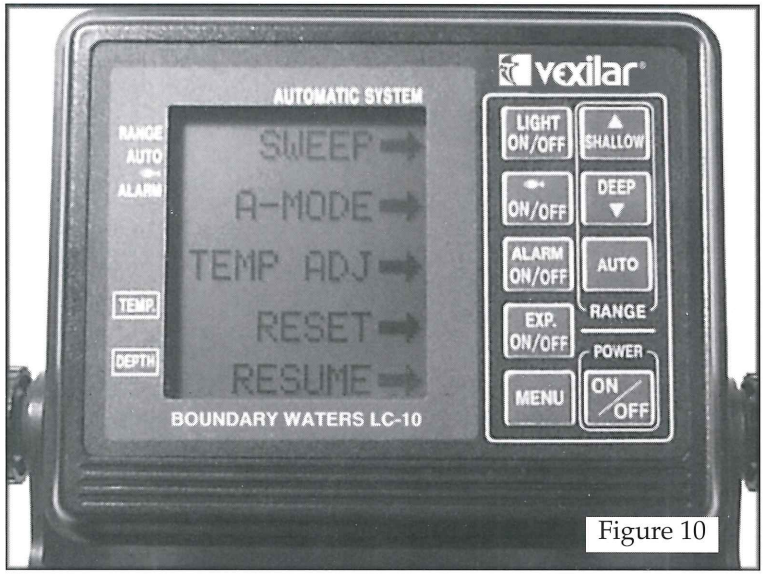

Figure 10

MENU FUNCTIONS

SWEEP

Press the MENU button and then the LIGHT button to enter the SWEEP settings. SWEEP controls how fast the information moves across the display. There are 4 steps of sweep speed. The top selection, four arrows, is the fastest setting. The bottom selection, one arrow, is the slowest. The sweep speed should roughly match the boat speed to get the most accurate reading. Press the MENU button to resume to the normal view.

A-MODE

Press the MENU button and then the FISH ID button to enter the A-MODE settings. A-MODE is a vertical representation of the depth that is near "real time" speed, unlike the scrolling display which has more delay. It will be displayed to the right of the normal display on the screen. The default mode is off. To turn the feature on press the FISH ID button while you are in the A-MODE setting page of the menu. Pressing the ALARM button turns off the A-MODE and replaces it with a depth scale that can help when trying to judge the depth of a target. Press the MENU button to resume to the normal view.

TEMP ADJ

Press the MENU button and then the ALARM button to enter the TEMP ADJ settings. This page allows you to adjust or calibrate the temperature reading if you have the optional temperature probe installed on your LC-10. Pressing the LIGHT button will decrease the read temperature by one tenth of a degree each time you press it. Pressing the FISH ID button will increase the reading.

RESET

Press the MENU button and then the EXP. button to enter the system reset setting. RESET returns all setting back to the factory original settings. Press the FISH ID button to reset the system. Use this feature to trouble shoot problems or to get back to a "known" state .

RESUME

While in any menu page, press the MENU button to return back to the normal view.

SIMULATOR

There is a built-in simulator that will allow you to operate the LC-10 without being on the water. To activate it, turn the unit off. Then, press the ON/OFF button and hold it until you hear a second set of beeps. You can then let go and the simulator will start.

Typical Indications

Once the boat is in the water and you have turned on the LC-10 you must allow it time to find the bottom. This can take just a short moment or several minutes, depending on the depth and conditions. As soon as the digital depth appears the graphical representation of the bottom will start to move across the screen. The appearance of the bottom signal can give you information as to what type of bottom you are over.

The LC-10 has a built in Clean Line feature which can help determine the hardness of the bottom. Clean Line "cleans out" the target signal on harder objects. A hard bottom will appear cleaned out in the center. A soft bottom will be all black.

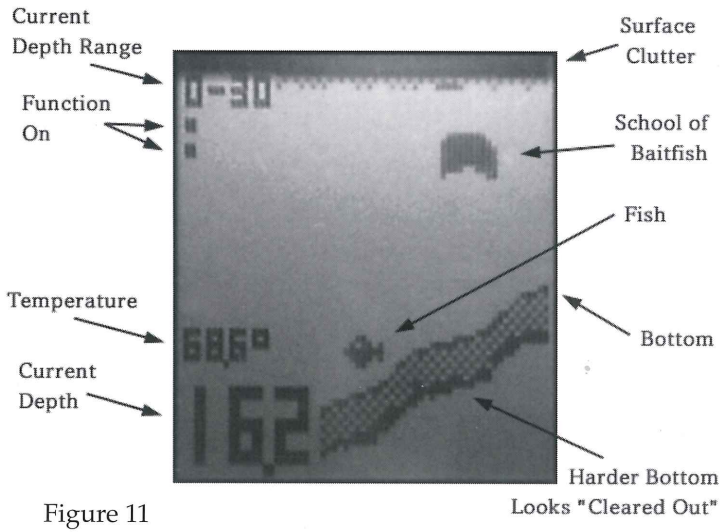

Figure 11

SEEING FISH

With the FISH ID feature on, any target that the LC-10 identifies as a fish will change to a fish symbol shortly after it appears on the screen.

With the FISH ID feature off, the Clean Line feature will help you identify fish from floating debris. If the target appears cleaned out, you can assume it's something significant, like a fish. In heavy weeds this can be difficult to see. It is best to use the Fish ID feature in these conditions.

SURFACE CLUTTER

The line of information going across the top of the display represents the surface of the water. This line can get quite wide at times, due to surface clutter. Tiny marine life, such as algae or plankton, can be responsible for this. Choppy or rough waters can also be a cause as tiny air bubbles are forced down under the surface. Surface clutter has little effect on the performance of the unit.

HIGH SPEED OPERATION

The LC-10 can read depths at almost any boat speed. Due to the limited speed of the display, the displayed bottom may be some distance behind you, depending on how fast the boat is traveling. Use the A-MODE feature to help you with high speed readings. Here, high speed is defined as any speed at or above the speed at which the boat planes out. Once the boat starts to plane, turbulence will develop

behind the transom. If your transducer is poorly mounted, the unit will lose the bottom at a certain boat speed. This is due to all of the air bubbles in the turbulent water. Readjustment of the transducer mounting should solve this problem.

SHALLOW WATER OPERATION

When the LC-10 is in the AUTO mode, it automatically senses the bottoms depth and tries to keep the best view at all times. Although the display may not show it, the LC-10 is monitoring basic sonar signals such as the bottoms second echo and various target's signal strengths. This way it can maintain the optimum gain level, automatically, for you.

In very shallow water (less than 3 feet) the unit can get "over-welmed". In this condition the unit will show erroneous information. The graphic display will become mostly black and the digital numbers on the display will read depths that are much deeper than reality. These depths are actually multiple echoes of the real bottom. **It is important to use caution when navigating in shallow waters. Use common sense. Don't rely solely on your depthfinder.**

It often helps to turn off the AUTO feature and manually change the range to the 5 or 10 foot range. This tells the LC-10 that you are in shallow water and it will adjust the gain appropriately. If the digital depth reading doesn't seem right, it is probably a multiple of the correct depth. Use the graphic display as a better reference.

ICE FISHING

The stable platform of ice lets you concentrate on your bait and the fish around it. The bottom becomes less important because it never changes. The only movement on the display is of your bait and fish.

Unlike open water use, the direction in which the transducer is pointed is very critical. You want your bait to be located in the dead center of the cone sound, directly under the transducer. This way you can see very small baits at low gain settings and also see fish come in from all sides. If you are not using the optional Ice-Ducer system, the transducer must be attached to an adjustable arm so that it can be manually pointed directly at the bait. Sometimes it helps to attach a bubble level to the transducer so that you know when it's straight.

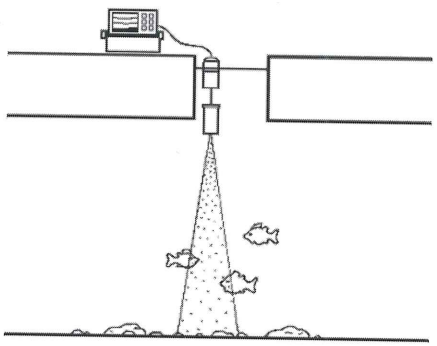

FIGURE 12

When you drop your bait down into the water, you should see it come onto the screen as a line curving towards the bottom. If you are using a swimming bait or a lure that darts to the side as it's jigged, you will see the signal strength change as the bait moves. This is due to the changing position of your bait. Sometimes it may even disappear if the bait goes out of the cone.

MAINTENANCE

Maintenance for the Boundary Waters LC-10 is very simple. There, simply, is not that much to maintain. Because of this, problems can sneak up on you if you're not careful.

The unit and transducer should be removed whenever the boat is parked to guard against theft. Don't store it in a place that may fill with water.

Power connections need constant checking. Corrosion can develop and cause intermittent or loss of operation. Spray the power connector and battery compartment with silicone to prevent this. Remove the batteries before you put the unit away for storage.

The transducer should be checked for scratches and cracks which can reduce the units sensitivity. Cuts or breaks in the cord should be repaired as soon as possible so corrosion doesn't attack the wire. Periodically clean the face of the transducer with a mild detergent. An oily film can develop which will cause weak readings.

Clean the face of the unit with a mild soap. Don't submerge the unit when cleaning.

TROUBLE SHOOTING

Symptom	Possible Cause
Unit will not turn on.	Check for proper battery polarity and that you have fully charged, working batteries.
Unit is turned on, but there is no display.	Battery voltage may be too low. The unit will show no display if the voltage is below 8.5 volts.
Unit runs well for a short time, then the unit quits.	Bad battery. Voltage may be good when checked, but may fall as it is loaded.
Unit runs and shows display light, but does not read depth.	Transducer is not plugged in or not in contact with the water.
Unit works, but needs high gain to see bottom or targets.	Transducer is not aimed correctly or needs to be cleaned.
Unit works, but has too many lines on the display. Can't tell what is what.	Many air bubbles or very small targets in the water.
Unit works well when sitting still or at slow trolling speeds, but loses reading when the boat speeds up.	Improper transducer installation or adjustment. There is a loss of clear water flow across the face of the transducer when the boat reaches a certain speed.
Unit works, but shows noise when the engine is started or the electric trolling motor is turned on.	Improper ground or missing ground in electrical system. Defective engine or trolling motor.
Unit does not save settings in memory. Does not sound normal beeps when turned on.	Internal lithium battery is dead. Replace with new. Common number is CR2032.

OTHER VEXILAR PRODUCTS

The Edge

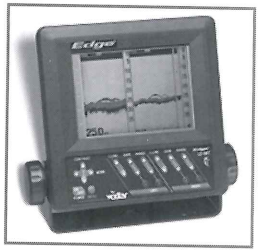

The Edge, model LC-507, is the ultimate LCD depth sounder. It's unique design incorporates two transducers running at the same time. The split screen view is like having two different depth finders built into one unit.

The FL-8SLT Color Flasher

The FL-8SLT is a compact and lightweight flasher designed for serious anglers. Besides indicating depth, the unit also shows changes in bottom content and conditions. It has three display colors. Red indicates a strong signal and green indicates a weak signal. Orange is a medium signal.

The FL-18 Color Flasher

The FL-18 has many of the same features as the FL-8SLT, plus additional features such as split-screen zoom, a low power mode for shallow water, and a super bright display.

BATTERY STATUS INDICATOR

The Vexilar Battery Status Indicator works with all 12 volt batteries and can be permanently mounted or used as a portable unit. It monitors your battery constantly as it is discharging and charging. Battery charge status is indicated with highly visible colored LED lights.

12 VOLT SEALED LEAD ACID BATTERY WITH CHARGER

This Vexilar Battery was designed for sportsmen on the go, with rugged construction and design features that make it ideal for summer and winter use. With a near "bulletproof" charger, this system packs enough power to run your equipment for hours, and for years to come.

PORTA CASE

The unique Vexilar Flasher Porta Case holds your FL-8SLT, LC-10, or other manufacturer's sonar or GPS. It has space for your transducer, a rechargeable battery, and the Vexilar Battery Status Indicator. The round base is just the right size to fit down inside a standard 5 gallon bucket.

104 DEPTHERM

The fishing odds are on your side when you use DEPTHERM. It tells you quickly and accurately what temperatures are below your boat and it also tells you the temperature at a specific depth. If your DEPTHERM indicates that the water temp is wrong for the species you're after, you can quickly move.

OPTIONAL TRANSDUCERS

HIGH SPEED TRANSDUCERS

TB0044-7P

19 Degree Transom Mount High Speed Transducer. Comes with the Mounting Bracket and 25 Feet of Cable.

TB0030-7P

9 Degree Transom Mount High Speed Transducer. Comes with the Mounting Bracket and 25 Feet of Cable.

TB0045-7P

Dual Beam 9/19 Degree Transom Mount High Speed Transducer. Comes with the Mounting Bracket and 25 Feet of Cable. Built-In Switch Box must be Mounted within 3 Feet of the Depth Finder.

TB0084-7P

12 Degree Transom Mount High Speed Transducer. Comes with the Mounting Bracket and 25 Feet of Cable.

BK0044

Optional Suction Cup Mount for all of the above High Speed Transducers. Dual suction cups for extra holding power.

PUCK STYLE TRANSDUCERS

TB0023-7P

19 Degree Puck Transducer. For Mounting on a Electric Trolling Motor, In-Hull Mounting, Portable Use, or Ice Fishing. Comes with 15 Feet of Cable.

BK0023

Optional Suction Cup Mount for TB0023.

TB0027-7P

9 Degree Puck Transducer. For Mounting on a Electric Trolling Motor, In-Hull Mounting, Portable Use, or Ice Fishing. Comes with 25 Feet of Cable.

TB0032-7P

Dual Beam 9/19 Degree Puck Transducer. For Mounting on a Electric Trolling Motor, In-Hull Mounting, Portable Use, or Ice Fishing. Comes with 25 Feet of Cable. Built-In Switch Box must be Mounted within 3 Feet of the Depth Finder.

TB0087-7P

12 Degree Puck Transducer. For Mounting on a Electric Trolling Motor, In-Hull Mounting, Portable Use, or Ice Fishing. Comes with 25 Feet of Cable.

ICE FISHING TRANSDUCERS

TB0050-7P

19 Degree Ice-Ducer. Self Leveling and Floats in the Ice Hole. Comes with Float, Stopper, and 7 Feet of Specially Designed Cable.

TB0051-7P

9 Degree Ice-Ducer. Self Leveling and Floats in the Ice Hole. Comes with Float, Stopper, and 7 Feet of Specially Designed Cable.

TB0052-7P

Dual Beam Ice-Ducer. Self Leveling and Floats in the Ice Hole. Comes with Float, Stopper, and 7 Feet of Specially Designed Cable. Built-In Switch Box must be Mounted within 3 Feet of the Depth Finder.

TB0080-7P

12 Degree Ice-Ducer. Self Leveling and Floats in the Ice Hole. Comes with Float, Stopper, and 7 Feet of Specially Designed Cable.

SERVICE AND SUPPORT

If you find that you need help, feel free to contact us. Please have ready the model number and, if possible, the serial number of your product. Be sure to read the Trouble Shooting sections first.

Address

Vexilar, Inc.
200 W. 88th St.
Minneapolis, MN, 55420-2752

Telephone

(952) 884-5291 (8 am to 5 pm M-F Central Time)

Fax

(952) 884-5292

Web Site

www.vexilar.com

Email

service@vexilar.com

NOTES

Vexilar, Inc.
200 West 88th Street
Minneapolis, MN 55420
952-884-5291; Fax 952-884-5292
web: www.vexilar.com
e-mail: info@vexilar.com